AE 8900 Report Spring 2023
Advisor: Dr. Brian Gunter

Wireless Energy from Beamed Signals: A Case Study in Rapid CubeSat Design

Luke Lawver *
Georgia Institute of Technology Space Systems Design Lab, Atlanta, GA
GTID#903418399

This paper focuses on the mission design and trade studies performed in the development of the Wireless Energy from Beam Signals (WEBS) CubeSat, a power-receiving target in the Space Solar Power Incremental Demonstrations and Research (SSPIDR) wireless space-to-space power transmission technology demonstration mission supporting the Arachne primary spacecraft. The development process of the mission is discussed in detail, with an emphasis on the rapid development of a robust, low-cost mission. Power, attitude knowledge, and communications trade studies that ultimately influenced the final spacecraft and mission design are discussed in detail, along with sensor selection and operational design. The trade studies explored focus primarily on the challenges associated with the operation of a tumbling spacecraft with limited attitude control regarding both power generation and attitude estimation. Additionally, the dual communications systems design is discussed along with a unique power inhibit system that allows for system checkouts and charging to occur prior to and leading up to deployment. Further discussed are the custom spacecraft bus design and manufacturing considerations. The successful demonstration of the wireless power transmission technology to WEBS will represent an important step toward enabling a new method of powering spacecraft on orbit.

I. Nomenclature

$ADCS$	=	Attitude Determination and Control System
$AFRL$	=	Air Force Research Laboratory
CDH	=	Command and Data Handling
CSD	=	Canisterized Satellite Dispenser
DAQ	=	Data Acquisition Board
EPS	=	Electrical and Power System
IMU	=	Inertial Measurement Unit
NRL	=	Navy Research Lab
PCB	=	Printed Circuit Board
RFP	=	Request for Proposals
$SSDL$	=	Georgia Tech Space Systems Design Lab
$SSPIDR$	=	Space Solar Power Incremental Demonstrations and Research Project
TML	=	Total mass loss
$TT\&C$	=	Telemetry, Tracking and Command
UHF	=	Ultra High Frequency
UNP	=	University Nanosatellite Program
$WEBS$	=	Wireless Energy from Beamed Signals

*Graduate Research Assistant, Aerospace Engineering

II. Mission Introduction

The Wireless Energy from Beamed Signals (WEBS) mission is a 6U CubeSat designed to support the Space Solar Power Incremental Demonstrations and Research Project (SSPIDR), headed by the Air Force Research Laboratory (AFRL). In 2020, the Air Force sent out a request for proposals for a 6U power-receiving target to perform a tech demonstration of space-to-space wireless power transmission for which Georgia Tech submitted a proposal and was selected.

WEBS will be launched from Planetary Systems Corporation Canisterized Satellite Dispenser (CSD) mounted to the primary AFRL spacecraft, Arachne. Arachne is a medium-sized satellite designed to serve as a technology demonstrator for space-to-ground and space-to-space wireless power transmission. Arachne's primary mission is to collect solar power on orbit and beam it down to ground stations as high-frequency RF energy, however, one of its secondary missions is to demonstrate wireless space-to-space wireless power transmission, for which WEBS is the power-receiving target. If successful, Arachne will pave the way for future long-range space-to-ground and space-to-space wireless power transmission technologies.

As a power-receiving target for Arachne, WEBS has several unique challenges and drivers that differentiate it from other CubeSat missions. Briefly, these include a lower overall risk tolerance, a higher degree of reliability testing, and close collaboration with the primary satellite team. As WEBS serves as a crucial piece of a significant scientific experiment, more emphasis is placed on its ability to complete the science mission reliably and autonomously due to the vested interest of the principal science investigator, AFRL.

With this in mind, it must be noted that WEBS remains a University-level CubeSat mission and therefore accepts a relatively high-risk tolerance compared to that of the primary satellite. Additionally, the overall mission development lifecycle for WEBS is relatively short and therefore relies heavily on flight heritage from previous Georgia Tech Space Systems Design Lab (SSDL) missions, flying many of the same systems and sensors. WEBS was selected in January 2022 and is expected to fly sometime in 2025, with less than three years from initial design to integration on Arachne. WEBS is overseen directly by the University Nanosatellite Program (UNP), an organization that serves as the mission manager for tens of CubeSat missions across the United States, providing CubeSat teams with guidance and hosting design reviews throughout the mission lifecycle. WEBS is the first Technology Insertion mission overseen by UNP. As such, WEBS' mission designation under UNP is TI-1. The WEBS team also works closely with AFRL and the Navy Research Lab (NRL) to develop requirements and interfaces between Arachne and WEBS. The AFRL is responsible for the primary spacecraft and its interfaces, while the NRL engineered and delivered the science payload for WEBS that is planned to support Arachne.

III. Mission Requirements

Most key mission requirements for WEBS flow down directly from AFRL as a direct result of the goals of the proposed experiment, however, in addition to these requirements, UNP provides a modified list of common CubeSat requirements that enable the mission to fly on a majority of US launch vehicles. While the list of requirements is extensive, only the core system performance requirements are discussed here.

The original request for proposals (RFP) called for a tumbling 6U CubeSat built to host six rectenna panels (one on each face) and a payload data acquisition board (DAQ) to record the voltage potential on each rectenna panel during a fixed-duration power-beaming experiment. Each rectenna panel consists of a printed circuit board specially designed by the NRL that rectifies the incoming radio energy from Arachne to a DC voltage that can then be measured by the Payload DAQ. Both the rectennas and DAQ are provided by the NRL to be integrated into WEBS. In addition to hosting the payload DAQ and rectenna panels, the CubeSat is required to obtain sufficient data to post-process its attitude to within +/-1°and its position to +/-5m throughout the initial 5-hour experiment duration. In addition, the primary mission data must be down-linked within 60 days of the experiment and the CubeSat must perform both the experiment and pre-experiment checkouts without an operator in the loop. Further, the CubeSat cannot employ large deployables that could potentially block the six rectennas, and the use of deployables was generally discouraged. Lastly, the RFP suggests that the CubeSat be capable of completing the primary mission without precise pointing capabilities to avoid the cost and complexity associated with the procurement and integration of a full ADCS.

With these requirements in mind, the design for WEBS, both physically and operationally, is relatively straightforward, with a mission-focused design and minimal complications.

A. Mission Timeline

A simplified version of the WEBS mission timeline is presented below. Note that the primary mission is designed to take place completely autonomously, up until the first contact for S-band data downlink.

Deployment -8 mo	**Arachne and WEBS launch.**
Deployment -5 min	**Arachne sends three activation signals to WEBS.**
	WEBS begins boot-up sequence.
Deployment -4 min	**WEBS completes boot-up.**
	WEBS enters CHECKOUT Mode.
	WEBS sends State of Health 1 signal to indicate successful boot.
	WEBS begins system checkouts and attempts to recover anomalous systems.
Deployment -3 min	WEBS completes system checkout.
	WEBS begins logging Inertial Measurement (IMU) data at 1500Hz in IMU data buffer.
	WEBS begins logging sun sensor, magnetometer, and payload data at 5Hz.
	WEBS sends State of Health 2 signal to indicate clear to deploy.
	WEBS enters SCIENCE MODE.
Deployment	**WEBS deployed from Arachne.**
	WEBS saves IMU data buffer and lowers IMU logging rate to 5 Hz.
	WEBS begins logging raw GPS data at 1 Hz.
	WEBS begins propagating MEKF.
	WEBS begins to detumble.
Deployment +30 min	WEBS powers on experimental imager for 2-minute intervals at a 20-minute cadence.
	WEBS logs imager attitude solutions and timestamps.
Deployment +45 min	WEBS powers on EyeStar radio.
	WEBS begins sending real-time science data packets at 30-second cadence using EyeStar.
	WEBS begins sending health packets at 1-hour cadence using EyeStar.
Deployment +300 min	**Experiment ends.**
	WEBS stops logging science data and sending science data packets using EyeStar.
	WEBS enters NORMAL mode.
	WEBS begins sending post-science data packets at 6-hour cadence using EyeStar.
	WEBS powers on S-band radio in RX mode, awaiting handshake from ground station.
	WEBS receives handshake signal and begins streaming indexed primary mission data packets.
	WEBS continues attempting S-band downlink until all primary mission data received.
Primary data downlinked	WEBS continues logging data from secondary payloads.
	WEBS begins downlink of secondary mission data as commanded.
	WEBS awaits command for optional follow on experiment.

IV. System Overview

To provide context for the trade studies and later sections of this paper, a brief overview of the flight systems selected for WEBS is summarized below. A 3D render of the integrated CubeSat is shown in Figure 1 and an exploded view is shown in Figure 2.

A. Structure

The structure for WEBS is a completely custom spacecraft bus, designed entirely in-house by the WEBS team with the goal of being simple to machine, stiff, and adaptable for future missions. Many design features of the WEBS structure employ lessons learned from previous CubeSat structures developed by the SSDL, mostly related to manufacturability

and ease of integration. The structure is designed to meet the specs for integration into Planetary System Corporation Canisterized Satellite Dispenser (CSD)[1]. The structure is machined from a hard-anodized 7075 aluminum alloy for the bottom plate that interfaces with the deployer, with the rest of the structural components machined from alodine-treated 6061 aluminum alloy.

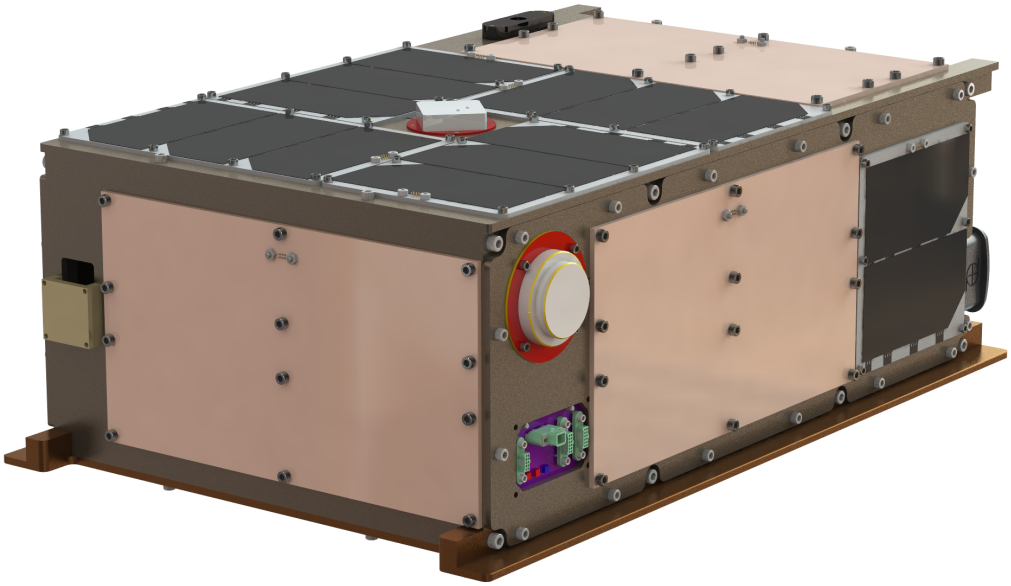

Fig. 1 3D render of WEBS.

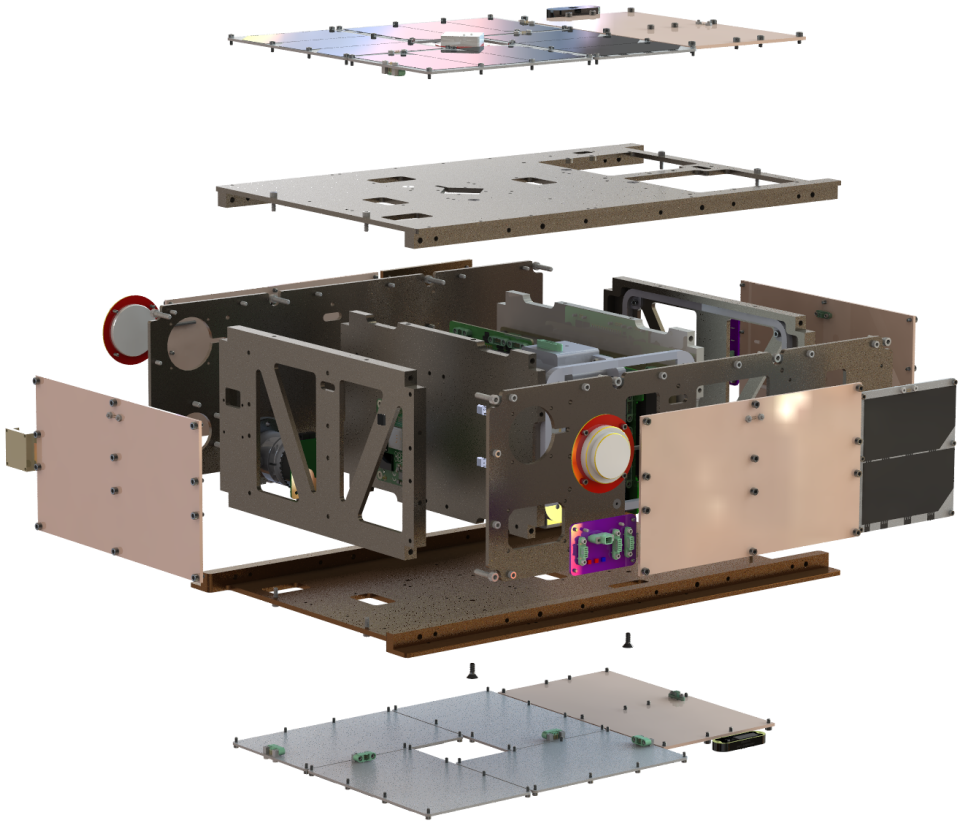

Fig. 2 3D exploded view of WEBS.

B. Electrical and Power System (EPS)

WEBS contains two independent Electrical and Power Systems. The primary system is the primary system used by the spacecraft bus to complete the science mission, powering all mission-critical systems, while the secondary EPS is entirely experimental and flown to achieve flight heritage. The primary EPS system onboard WEBS consists of custom solar panels, two custom battery packs, a commercial EPS controller, and a custom inhibit board. These components were selected based on previous flight heritage and current technologies in development at the Georgia Tech Space Systems Design Lab. The WEBS EPS stack is shown below in Figure 3. The EPS system is discussed in greater detail in section VI.

C. Telemetry, Tracking, & Control (TT&C)

For communication and commanding, WEBS utilizes two independent systems, serving different roles while providing some redundancy. The primary data link consists of a full duplex S-band radio for high data rate streaming of crucial primary mission data to include payload, ADCS, and raw GPS data, along with secondary experiment data later during mission operations. The secondary data link is a NearSpaceLaunch (NSL) system that transmits and receives data packets using the Iridium satellite constellation to downlink real-time payload and health data and is used primarily to obtain regular updates on spacecraft health. To provide precise positioning on orbit, the NovAtel OEM719 GPS receiver has been selected alongside two Tallysman TW1829 pre-filtered L1/L2 GPS antennas.

1. NearSpaceLaunch EyeStar S4

The selected Iridium transceiver is a NearSpaceLaunch EyeStar S4, a low-power transceiver that can operate in the absence of a functioning flight computer. The EyeStar sends a standard health packet containing health and housekeeping data at a minimum of a 1-hour cadence to provide ground operators with regular updates on spacecraft health. In addition to regular health packets, the EyeStar can accept custom packets from the flight computer to downlink

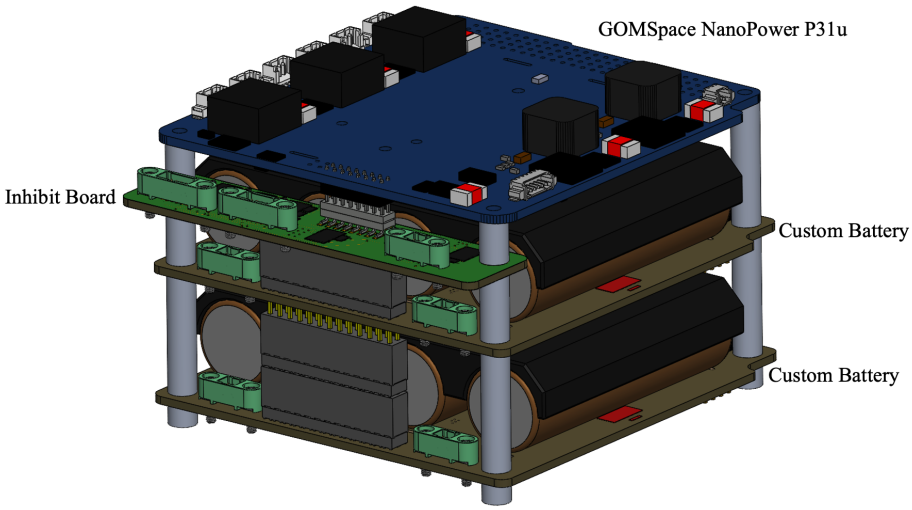

Fig. 3 WEBS EPS Stack.

over the Iridium network and send ground operator commands to the flight computer. For WEBS, the EyeStar is nominally utilized as a real-time beaconing system to relay relevant information to operators such as battery voltage, spacecraft mode, GPS position and velocity, attitude filter solution, and angular rates. Additionally, during the initial experimental duration, the EyeStar beacon rate is increased to two beacons per minute to send real-time science data packets containing the above-mentioned data along with rectenna voltages to ensure that a minimum science data set is collected and downlinked as soon as possible.

The data from the EyeStar S4 is accessible from a web interface provided by NearSpaceLaunch that allows for 24/7 access to downlinked data and spacecraft commanding. Constant Iridium network coverage cannot be assumed due to both the orbital conditions and the tumbling nature of WEBS, which can result in delayed or dropped packets from WEBS and delayed commanding. The EyeStar radio uses a directional patch antenna, which is expected to result in regularly dropped packets. An image demonstrating the small form factor of the EyeStar S4 is shown in Figure 4.

Fig. 4 NearSpaceLaunch EyeStar S4 transceiver.

2. S-band Radio

For the primary communications system to downlink critical science data, a high data-rate direct link system is required. In selecting such a system, the obvious contenders are S-band and UHF for a satellite of this size and power, each with their own benefits and drawbacks. UHF is considered the standard for most Low Earth Orbit (LEO) CubeSat missions, as data rates (9600bps) are generally sufficiently high, radios and ground stations are generally affordable and CubeSat UHF applications tend to use deployable omnidirectional antennas. S-band on the other hand is generally more expensive but can achieve much higher data rates(128kbps - 512kbps)[2] using a fixed directional patch antenna on a low power(5W) system. WEBS has opted to work with a commercial S-band ground station network (K-Sat) that can perform contacts on behalf of the operations team. In addition to having fully staffed and operational ground stations, one benefit of using a commercial provider is that data collection is not constrained to a single ground station, resulting in significantly more opportunities to contact the spacecraft. The selection of this option comes with some additional considerations, chief among them being the use of a directional patch antenna onboard a tumbling satellite lacking precision pointing capability. While this concern is valid, it is not a major issue as long as the spacecraft's tumble rate can be slowed to a reasonable value, as shown in Section V.B. In the end, the WEBS team selected S-band for its much higher data rates, fixed antenna, and the option to outsource ground operations when compared to UHF to improve overall mission assurance.

The radio chosen to down-link the primary mission data is a Satlab SRS3. Chosen by the recommendation of K-Sat, a commercial S-band ground station network, the SRS3 provides a minimum data rate of 128kbps, with a maximum downlink rate of 512kbps. As discussed in Section V.B, the selected system is expected to be capable of downlinking all mission-critical data within a few days of deployment from Arachne.

3. Global Positioning System (GPS)

The GPS receiver chosen to fly on WEBS is the NovAtel OEM719[3], an L1/L2 GPS receiver capable of streaming raw GPS data to the flight computer that can then be downlinked for post-processing, in addition to providing a computed position and velocity estimate to the flight computer. To complement this receiver, two Tallysman TW1829 pre-filtered L1/L2 GPS antennas[4] are fed into a GPS signal combiner connected to the NovAtel receiver. Two antennas are

used here to reduce the adverse effects of the tumbling nature of the spacecraft on the receiver's ability to achieve and maintain lock. Additionally, the selected antennas are specifically filtered for GPS frequencies due to concerns related to EyeStar transmissions jamming incoming GPS signals due to the close frequency allocations of the GPS frequencies and the Iridium network. To further combat this, the EyeStar TX/RX antenna is placed on a face oriented orthogonal to either of the opposing GPS antennas. A detailed analysis of the achievable position accuracy using this setup is still to be performed, but it is expected that high tumble rates could make achieving and maintaining GPS lock difficult.

D. Flight Computer and Software

The flight computer selected for the WEBS mission is a BeagleBone Black(BBB) Industrial, hosted on a custom motherboard. Chosen for its flight heritage at Georgia Tech, the BBB has flown on Georgia Tech's RANGE and TARGIT missions and is slated to fly on OrCa2 in early 2024. The BBB runs KubOS, an open-source Linux-based flight software written in Python and designed for use on CubeSat missions. Given the mission timeline, budget, and personnel, the BBB was the only feasible option as switching to a different flight software such as F' or cFS would simply require too much time to refine and develop in time for system and day-in-the-life testing. By using KubOS and leveraging previously written flight software, the WEBS team has been able to stick to a strict development timeline and focus efforts on testing rather than core software development. However, the BBB is relatively power hungry, consuming 1.7W while running KubOS, so switching to a microcontroller-based flight software to reduce power draw would be advisable if the mission timeline allowed for it.

E. Attitude Determination and Control System (ADCS)

The attitude determination and control system on WEBS consists of a high-sensitivity IMU, two fine sun sensors, a high-sensitivity magnetometer, and custom-fabricated magnetorquers. Given the selected mission architecture, WEBS does not necessarily need to have real-time attitude knowledge to complete its primary mission, as the attitude can be post-processed for the science phase of the mission. However, it is still useful to have a real-time attitude estimate onboard, and as such, the IMU, sun sensor, and magnetometer data are fused onboard using a Multiplicative Extended Kalman Filter (MEKF)[5] to provide a real-time attitude estimate that will be downlinked in EyeStar data packets.

In order to meet the precise +/-1°pointing requirement set forth by AFRL, precision sensors were selected. For the IMU, the EPSON G370[6] was selected for its stable gyro bias and overall low noise characteristics. For inertial attitude knowledge, two SolarMEMs nanoSSOC D60[7] sensors were selected for their previous flight heritage, high precision(0.1°), and wide field of view. These sensors are mounted on the +/-Y faces of the CubeSat and provide a wide range of coverage (+/-60°) for each sensor, minimizing the time spans for which the attitude filter must rely on IMU propagation. Lastly, the CubeSpace CubeMag2.1 Compact[8] was selected for its low noise characteristics and redundant design. This magnetometer serves to improve the estimated spacecraft attitude but is primarily used for detumble. The simulation in section V.C proves that the selected are capable of meeting the mission's attitude knowledge requirements.

In order to detumble, WEBS employs the CubeMag measurements along with custom fabricated magnetorquers to run a simple B-dot controller with the goal of slowing the tumble of the CubeSat to a sufficient rate that other systems including the S-band transceiver, GPS receiver, and EyeStar transceiver can operate for a reasonable duration before rotating out of alignment. The magnetorquers designed for WEBS are based on magnetorquers fabricated for the OrCa2 mission, adopting a simple air coil design that lends itself well to the large internal volume available inside the WEBS structure. These magnetorquers use a large coil area to produce a magnetic dipole, as opposed to traditional torquers that take the form of a cylinder with a core made from ferrous materials. An image of engineering model magnetorquers is shown in Figure 5. The rate to which the magnetorquers must de-spin WEBS is discussed further in Section V.B.

Note that WEBS will not attempt to perform inertial or specific pointing unless commanded by an operator after the primary mission has been completed. This is a decision made to reduce risk, given that the mission has been proven to be feasible as a slow-tumbler.

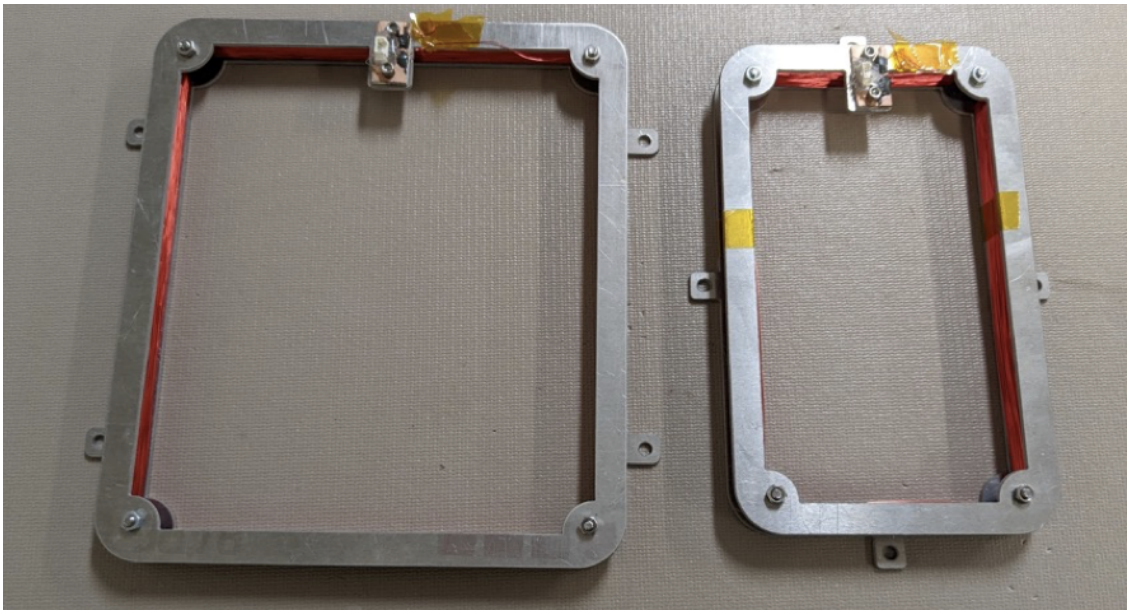

Fig. 5 Engineering Model Magnetorquers.

F. Payload

The primary payload onboard WEBS is the payload data acquisition board and six rectenna panels provided by the NRL. Pictured in Figure 6, these systems have been developed entirely by the NRL and provided to the WEBS team for system-level testing and integration. Each of the six rectenna panels consists of a printed circuit board that acts as an antenna to rectify the incoming RF energy from Arachne to a measurable voltage potential that is then passed to one of the six analog-to-digital converters on the payload data acquisition board (DAQ) on the primary avionics stack. The DAQ has both local flash storage and serial data streaming capabilities and as such simultaneously stores rectenna voltage data while streaming to the flight computer. With this design, the onboard flash data may be accessed by the flight computer after the experiment has been completed in the event of data loss or corruption onboard the flight computer.

The payload DAQ is based on an Atmel micro controller and is designed to operate via serial commands from the primary flight computer. The payload DAQ does not send any received power to the WEBS battery packs, but rather measures the voltage potential created by each rectenna.

A in-depth look at the rectenna receiver technology employed on WEBS is presented in [9].

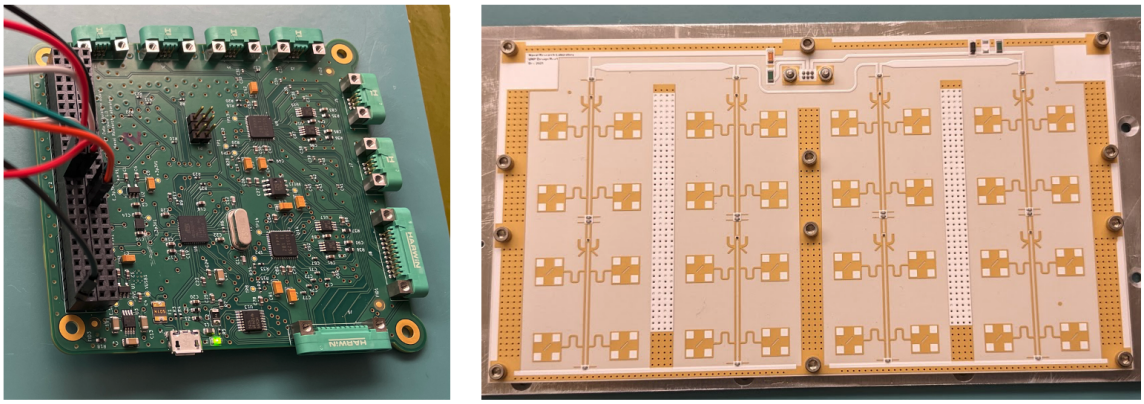

Fig. 6 Payload DAQ (left) and Rectenna (right).

G. Secondary Payloads

1. Secondary EPS

In addition to the primary power system, WEBS is flying a custom, experimental EPS designed to provide greater functionality and customization, while reducing cost for future SSDL missions. The Custom EPS has been designed from the ground up to meet the strict inhibit requirements of US CubeSat launch providers while implementing parallel redundancy, allowing the system to continue operating even in the event of an inhibit MOSFET failure.

The features of the Custom SSDL EPS mirror that of most commercial systems, including three permanent power channels with 6 configurable and switchable power channels, along with 6 solar charging inputs implementing max power-point tracking buck-boost regulators for efficient solar charging. When paired with the custom SSDL battery packs, the custom EPS has access to a very accurate state of charge estimate from each battery pack. For the WEBS mission, the custom EPS is configured with a single battery pack with tape heater loads to obtain system flight heritage in anticipation of the system flying as a primary EPS. The goal in the development of the Custom EPS is to provide a fully featured EPS that is entirely designed, built, and tested by SSDL for use in future SSDL CubeSat missions. As designed, the Custom EPS meets the standard CubeSat requirements better than many commercial options while being more configurable.

2. Experimental Star Camera

WEBS also plans to fly an experimental star camera that consists of a Raspberry Pi Compute Module, a Raspberry Pi HQ camera, and a space-rated lens. This star camera runs custom code that can perform astrometry onboard to compute near real-time attitude solutions and if successful, would easily be able to meet the WEBS attitude knowledge requirements. The system has already been developed and tested on the ground but has not yet been tested on orbit. In addition to real-time solutions, the star camera can also send images to the S-band transceiver to be downlinked to compare onboard astrometry results with post-processed results. If successful, the star camera on WEBS could serve as an extremely low-cost star camera for future CubeSat missions requiring precise attitude knowledge.

A 3D render of the two avionics stacks is shown below in Figure 7. Avionics that are not located on the stack includes the two sun sensors, magnetometer, and star camera.

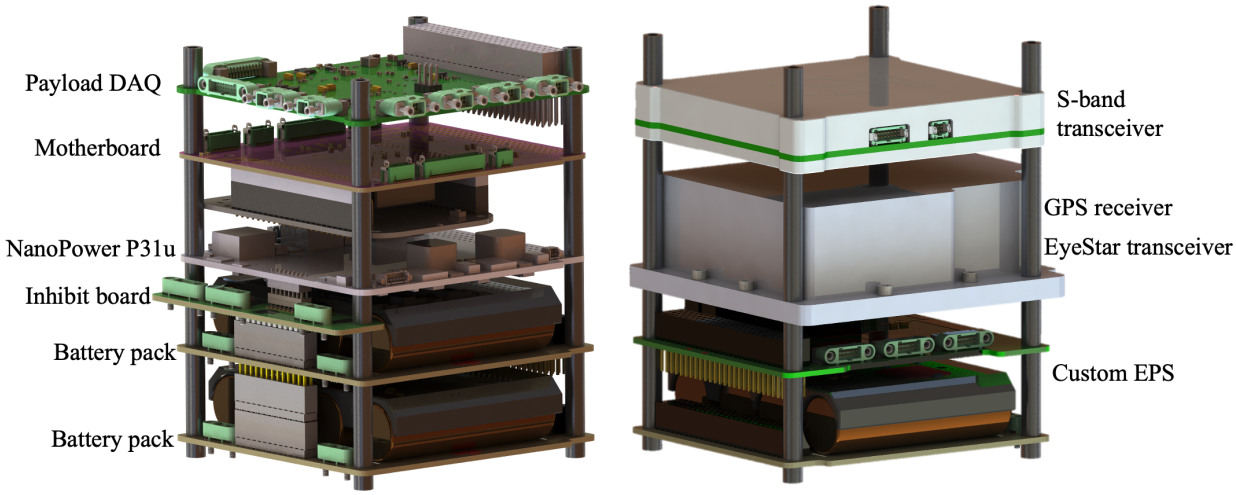

Fig. 7 Primary (left) and secondary (right) Avionics stacks.

V. Trade Studies

In order to proceed with the chosen tumbling mission architecture, several case studies and simulations must be performed to prove the feasibility of mission success with the chosen architecture. For this particular tumbler, there are three primary areas of concern: 1) Power, 2) Telemetry, Tracking, and Control(TT&C), and 3) Attitude Determination. Power is the chief concern, as a tumbling CubeSat will generate power in an unpredictable manner according to its

orbital conditions, angular rates, and the direction of its angular momentum vector. In addition to power generation, TT&C is of major concern due to the common use of patch antennas on core radio technologies, such as the selected GPS, S-band, and Iridium systems. Each of these systems performs best when pointing directly at its respective receiver or transmitter, and as such, the effect of the spacecraft tumble rate on these systems must be quantified. Lastly, attitude determination, which is a key component of this mission, can be affected by tumble rate, though not nearly as much as the systems previously mentioned. The key driver here is to ensure that an adequate attitude solution can be found as the sun rotates in and out of the respective sensors' field of view and as the CubeSat enters and exits eclipse.

In order to address these concerns, comprehensive simulations were performed in MATLAB to better understand the expected and acceptable tumble rates for each of these systems to ensure adequate system performance.

A. Power Generation

For typical satellite applications, power budgeting is generally straightforward, as solar cells can be sun-pointing for long periods of time with the use of an active Attitude Determination and Control System (ADCS). This allows for scheduled battery charging periods in between mission activities such as science or communications that often require the solar cells to face away from the sun. For WEBS, the lack of a precise pointing control means that there can be no reliance on a sun pointing SAFE mode, and the spacecraft must be capable of surviving in all tumble conditions.

In order to quantify the expected power generation for the WEBS mission, a Monte-Carlo analysis was performed to understand the best, average, and worst-case power generation scenarios. In order to accomplish this, a MATLAB simulation was written that simulates both the spacecraft orbit and attitude over time. The orbit is propagated using two-body dynamics with J2 perturbations and the attitude is propagated from a fixed initial condition for a variety of initial tumble rates using Euler's rotational dynamics equations and knowledge of the designed spacecraft moments of inertia. Using NASA's SPICE toolkit, the sun position at a given simulation time is used to determine the sun incidence angle relative to each of the spacecraft body axes. Then, using knowledge of solar cell placement around the spacecraft, power generation is simulated for each of the sun-facing sides, while also accounting for time spent in eclipse. Further, a cosine-squared relationship between sun incidence angle and power generation is assumed with a 20° minimum sun angle applied, as shown in Figure 8, where a 0° sun angle indicates the alignment of the solar cell normal vector and the sun vector. Additionally, power generation from Earth's albedo is considered, in order to create a complete estimate of what WEBS can expect to see while on orbit. The parameters used for this simulation are summarized in Table 1 below.

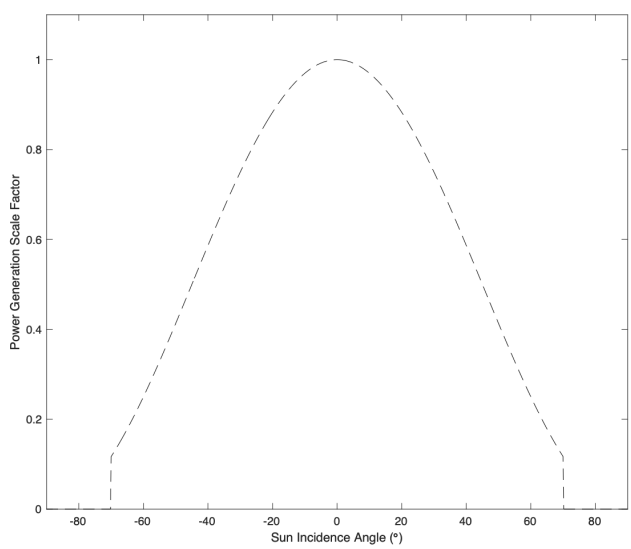

Fig. 8 Simulation power generation scale factor versus sun angle.

Equation 1 below shows the calculation performed at each time step for each power-generating face. By computing the power generation for each face and summing the results, the instantaneous power generation for any arbitrary case can be simulated over time. In order to quantify the expected power generation, a Monte Carlo analysis was run for a

Parameter	Symbol	Value
Solar Irradiance at Earth	I	1368 W/m^2
Solar Cell Efficiency	η	30%
Solar Cell Area	A	30.15 m^2
Sun Incidence Angle	ϕ	-90°- +90°
Number of Solar Cells on Face	n_{cells}	12 for +/- Y faces

Table 1 Power Generation Simulation Values.

wide variety of initial orbital conditions and tumble rates. Orbital conditions are based on an expected orbit provided by the primary vehicle team and tumble rates are based on those listed by Planetary Systems Corporation in the CSD data sheet and the ini-depth study performed in [10].

$$[H]Power = IA\eta cos^2(\phi)n_{cells} \tag{1}$$

1000 cases were simulated over a 48-hour simulation period with randomized orbital parameters, resulting in an average power generation case of 4.21W. In running a variety of simulation cases, it was found that increasing the total simulation duration tends to reduce the gap between the minimum and maximum power generation cases, as longer simulation times help to smooth out some of the randomness inherent in these results. Unsurprisingly, the tumble rate does not affect power generation inherently, but rather the duration and separation of high-power versus low-power generation spans. In 1000 cases there were not any instances where WEBS is power negative in SAFE or CHARGE mode. WEBS is power negative, however, in CHECKOUT, SCIENCE, and NORMAL mode as expected for a tumbler. The power consumption in each mode is highlighted in the power budget in Figure 9.

				Checkout Mode		Science Mode		Normal Mode		Safe Mode		Charge Mode	
Subsystem	Component	Quantity	Contingency	CBE Power Draw (W)	Duty Cycle	CBE Power Draw (W)	Duty Cycle	CBE Power Draw (W)	Duty Cycle	CBE Power Draw (W)	Duty Cycle	CBE Power Draw (W)	Duty Cycle
Payload	Data Acquisition Board	1	10%	0.34	1	0.34	1	0.34	0	0.34	0	0.34	0
ADCS	IMU (Epson M-G364)	1	10%	0.06	1	0.06	1	0.06	1	0.06	0	0.06	0
	Magnetorquer	1	10%	0.30	0	0.30	1	0.30	0.05	0.30	0	0.30	0
	Magnetometer	1	10%	0.05	1	0.05	1	0.05	1	0.05	0	0.05	0
	Sun Sensor	2	10%	0.02	1	0.02	1	0.02	1	0.02	0	0.02	0
TT&C	Novatel OEM719	1	25%	1.30	1	1.30	1	1.30	0.167	1.30	0	1.30	0
OBC	BeagleBone Black	1	10%	1.69	1	1.69	1	1.69	1	1.69	1	1.69	0
COM	S-Band TX	1	25%	5.00	0	5.00	0	5.00	0.015	5.00	0	5.00	0
	S-Band RX	1	25%	0.55	0	0.55	0	0.55	1	0.55	0	0.55	0
	EyeStar S4 Idle @ 15V	1	10%	0.28	1	0.28	1	0.28	1	0.28	1	0.28	0
	EyeStar S4 (TX) @ 15V	1	10%	1.05	0	1.05	0.05	1.05	0.05	1.05	0.05	1.05	0
EPS	NanoPower P31 us	1	10%	0.30	1	0.30	1	0.30	1	0.30	1	0.30	1
Imager	RPi CM4	1	25%	2.00	0	2.00	0.1	2.00	0.056	2.00	0	2.00	0
	Camera	1	25%	0.50	0	0.50	0.1	0.50	0.056	0.50	0	0.50	0
	System Level Contingency			25%		25%		25%		25%		25%	
	MEV Power Consumption (W)			5.8		6.7		5.0		3.2		0.4	
	Orbit Average Power Production (W)			0.0		4.2		4.2		4.2		4.2	
	Expected Net Power (W)			**-5.8**		**-2.5**		**-0.7**		**1.0**		**3.8**	

Fig. 9 WEBS Power Budget.

In order to obtain a full picture of the power state of the WEBS CubeSat throughout a representative mission timeline, the power consumption on board the CubeSat was also captured in this simulation using a finite state machine that switches modes based both on the timestamp, battery state of charge, and communications passes discussed in Section V.B. A mode flow chart with switching criteria is shown below in Figure 10. For a guide to the operations performed in each of these modes, reference the mission timeline in Section III.A.

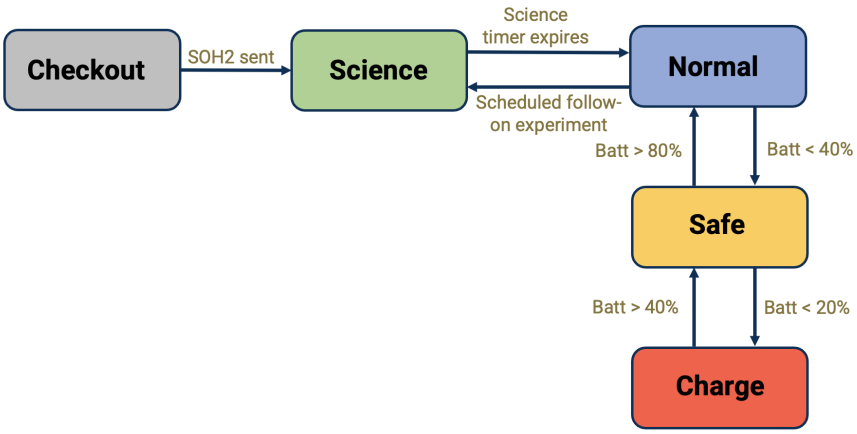

Fig. 10 Mission mode flowchart.

The net battery energy over time is shown in Figure 11 for a below-average power generation case of 3.81W to provide an example of how long WEBS can expect to survive before crucial mode switches occur. From the Figure, it is evident that for this below-average case, WEBS achieves 34 hours of operations before switching into SAFE mode. This includes the 5-hour experiment time and an additional 28 hours of time in which WEBS attempts to downlink the primary mission data over the S-band radio. After this initial discharge, WEBS takes about 60 hours to recharge its batteries before switching back into NORMAL mode to attempt communications passes for another 20 hours. This cycle repeats with a cadence depending on the average power generation, never needing to enter safe mode in any of the 1000 simulated cases. Note that during the recharge time in SAFE mode, the flight computer and EyeStar transceiver remain powered on, providing health data and listening for commands from operators. This simulation demonstrates that even though WEBS is a tumbler, it can reliably perform the extended periods of high power draw operations required to complete the primary mission and subsequent data downlink.

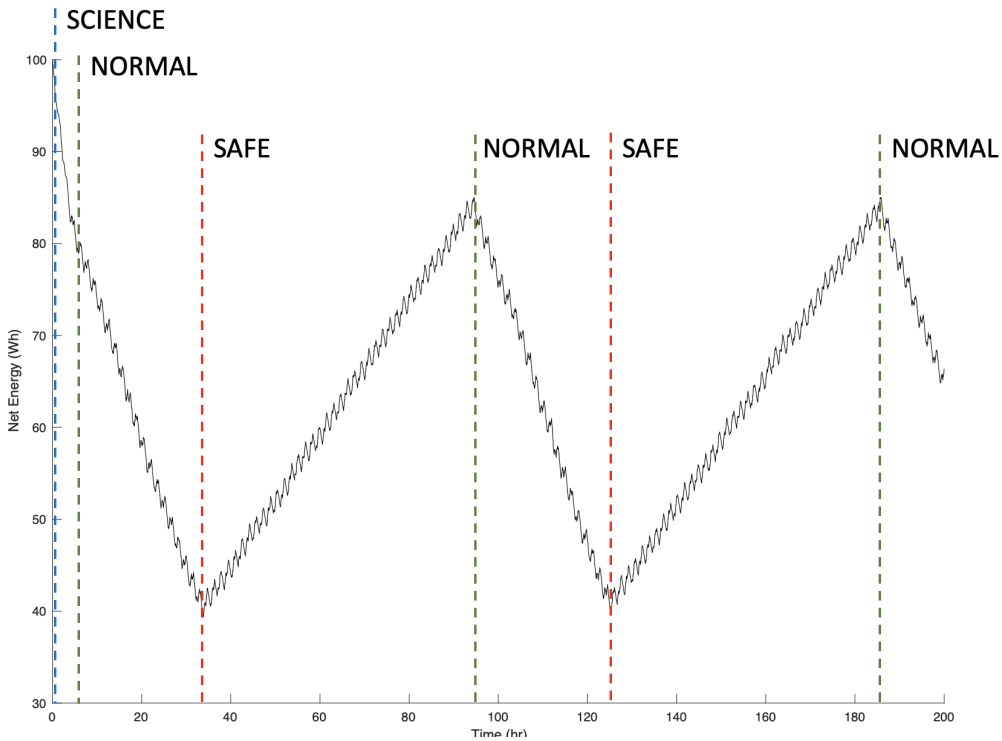

Fig. 11 Net onboard energy profile for below-average 3.81W power generation case.

B. TT&C

As a part of the simulation outlined above, S-band ground contacts are also simulated in order to provide the most accurate power consumption values possible and to quantify the expected regularity and average duration of such passes. The main goal of the ground pass simulation discussed here is to determine the spin rate required to achieve reasonable ground station contact times. Though the exact minimum ground station contact time for a successful downlink pass is unknown at this time, it is assumed that the S-band ground station and transceiver must be given at least a few seconds to perform a handshake sequence prior to when mission data transmission occurs, rendering short contact windows of few seconds to be impractical for downlinking critical data.

In this simulation, three arbitrary K-Sat ground stations are simulated alongside the spacecraft position in order to determine when valid ground contacts occur and the duration of each individual contact. In order for a contact to be considered valid, the satellite must be within the ground station line-of-sight at a 10°minimum elevation angle, and the body-fixed S-band antenna must be pointed within 40°of the ground station. This value comes from the antenna's half-power beam width specification in Table 2. If these conditions are met, a ground station contact timer is started until such a time that either of these conditions is no longer valid. A Monte Carlo analysis was run for the same initial orbital conditions for 100 different tumbling cases at a variety of tumble rates to quantify the relationship between the tumble rate and the average length of each ground pass. This simulation also reveals the total average contact time that can be expected over a given period, however, this value is more random and depends on the direction of the satellite angular momentum vector and precession conditions more so than the tumble rate directly. The arbitrary ground stations chosen for this simulation are in Los Angeles, Hawaii, and South Africa to provide representative coverage within the spacecraft's ground track latitude limits.

Antenna Parameter	Gain (Typ.)	Half Power Beam Width
Value	6 dBi	80 °

Table 2 S-band Antenna Characteristics.[11]

The results for the discussed simulation are shown below in Figure 12. Note that the labeled communications

duration is the average communications window for that particular simulation and individual contact lengths can vary significantly.

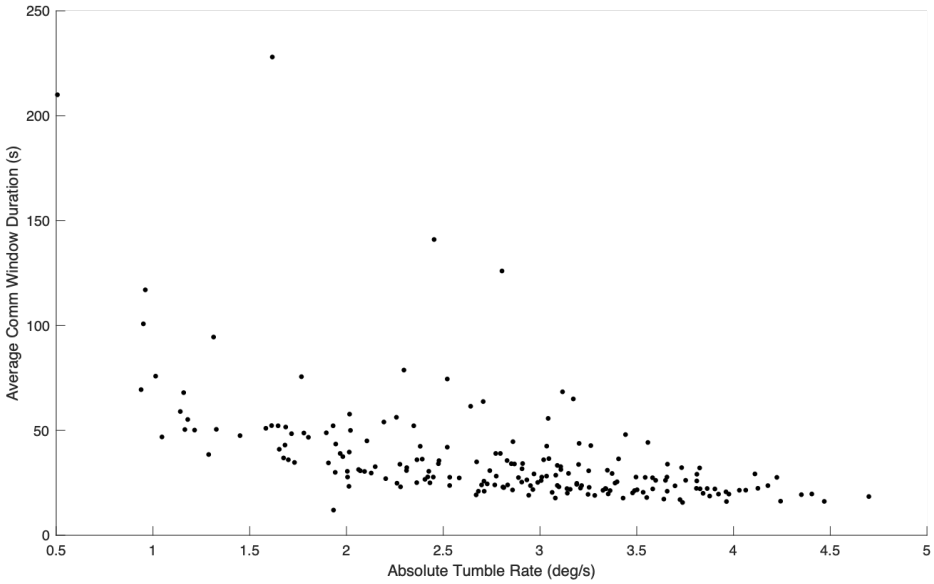

Fig. 12 Average S-band communications contact time versus tumble rate.

From the Figure, it is evident that slower tumble rates result in much longer overall contact times compared to higher tumble rates. Faster rates (4.5°/s) have a floor of about 15s, while slower rates (2°/s) have a floor closer to 30 seconds with a ceiling of up to 230 second contacts on average. Given these results, the ADCS team has been provided a requirement of a maximum of a 2°/s tumble rate once detumble completes, which is expected to take anywhere from 2 to 10 hours depending on the magnitude of the kickoff tumble rate based on simulations from the ADCS team. In addition to allowing for longer communications windows, slowing the tumble rate also reduces the overall risks related to GPS, EyeStar communications, and attitude determination as all these systems will experience longer contact windows, albeit with less frequent, but much more valuable contacts.

The simulation is run for a total of 24 hours, during 19 hours of which communications passes are attempted, resulting in an average contact time of 1200 seconds over this 19-hour period. Given the expected science data volume of 35 MB and a worst-case data transmission rate of 128kbps for the selected transceiver, approximately 2200 seconds of useful downlink time is required, which could be accomplished with about 34 hours worth of attempted communications, allowing the primary mission data to be downlinked in just a few days. This work could be expanded by running more cases to provide more statistically significant results, but as an initial study, this analysis proves that so long as the spacecraft tumble rate can be slowed to a reasonable rate, WEBS can expect an adequate amount of S-band downlink time. A ground track of an example case with an absolute tumble rate of 1°/s is illustrated in Figure 13. Ground stations are represented by red x's and the highlighted green portions of the ground track show individual contacts where the CubeSat is both within line-of-sight of the ground station and the S-band antenna is pointed at the ground station within the constraints discussed above.

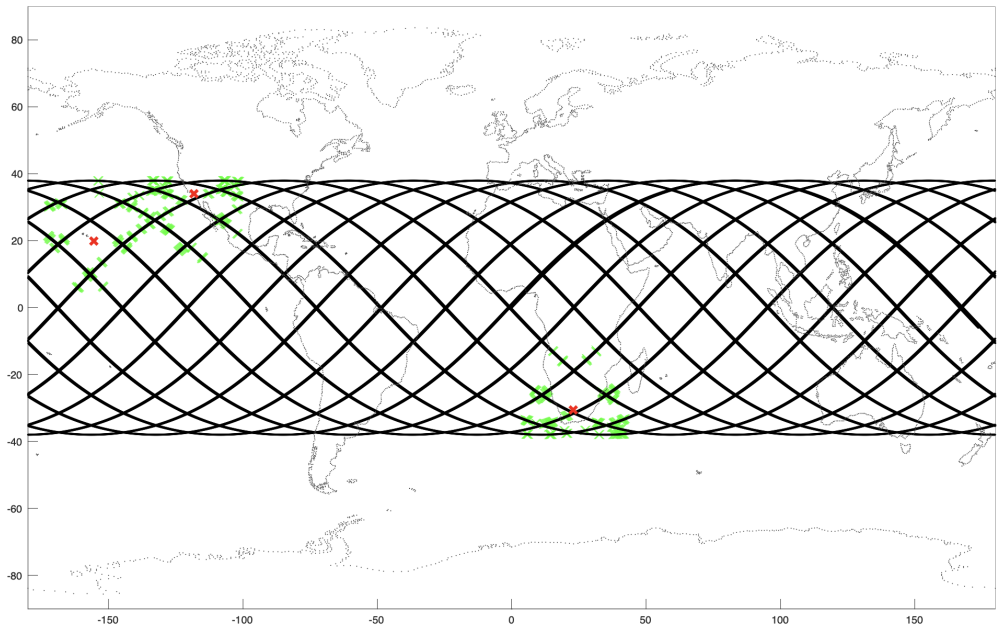

Fig. 13 Ground track of S-band communications passes.

As the primary mission data cannot all be downlinked in a single pass, the data will be split into indexed chunks that are sent in sequence. As the S-band transceiver is full-duplex, a checksum will be implemented that can verify when specific packets have been received on the ground. Using this method, operators can ensure that the full primary mission data set is downlinked.

C. Attitude Estimation

In order to address the attitude pointing requirement of attitude knowledge to +/-1°during the experiment, a MATLAB simulation was written to simulate the Multiplicative Extended Kalman Filter running onboard WEBS to validate the ability of the system to meet this requirement given the selected sensors. This simulation was written in MATLAB based on the algorithm from Markley and Crassidis[5] and mirrors the real-time algorithm run onboard the flight computer. For this simulation, IMU sensor data is generated using the propagated "true" IMU data from the initial orientation simulation passed through MATLAB's imuSensor[12] function that takes into account relevant sensor specifications as summarized in Table3 below. Additionally, using the same techniques as the power generation code, the sun angles to each sun sensor are computed at each timestep for which the sun appears in the sensor field of view. These values are then translated to the spacecraft body axes and perturbed according to the 1-σ noise value of the selected sun sensors (0.17°)[7]. This filter computes the spacecraft orientation, angular rates, and gyro bias in real-time.

Noise Characteristic	Value
Noise Density	4.68 $(°/hr)/Hz^{1/2}$
Gyro Bias Instability	0.8 $°/hr$
Angular Random Walk	0.06 $°/hr^{1/2}$
Data Resolution	32 bit

Table 3 EPSON G370 noise characteristics[6].

This simulation was run for a variety of initial conditions and tumble rates in order to quantify achievable real-time system performance for a 10 Hz filter update rate. The system consistently computes an attitude solution within 1°of

Algorithm 1 Multiplicative Extended Kalman Filter

$q^+_{k-1} \leftarrow q_0$ initial quaternion
$P^+_{k-1} \leftarrow P_0$ initial covariance
$\beta_{k-1} \leftarrow \beta_0$ initial gyro bias
$y^{sunsensor} \leftarrow$ simulated sun sensor data
$w^{meas} \leftarrow$ simulated gyroscope data
$s \leftarrow$ inertial sun vectors
for $t_k = 1 : end$ **do**
  Propagation Update
  $w_k = w^{meas}_k - \beta$
  $q^-_k = \theta(w_k, \Delta t) q^+_{k-1}$
  $P^-_k = \phi P^+_k \phi^T + Q_k$
  Compute $A(q^-_k)$

  Measurement Update
  $h_k = A(q^-_k) s_k$
  $y_k = y^{sunsensor}_k$
  $H_k = \begin{bmatrix} [h_k \times] & 0_{3x3} \end{bmatrix}$
  $K = P^-_k H^T_k (H_k P^-_k H^T_k + R)^{-1}$
  $\Delta x^+ = K(y_k - h_k)$
  $P^+_k = (I_3 - K * H_k) * P^-_k$

  Quaternion Update
  $q* = \begin{bmatrix} \frac{\Delta x^+_{1:3}}{2} \\ 1 \end{bmatrix} \bigotimes q^-_k$
  $q* = \frac{q*}{|q*|}$

  Gyro Bias Update
  $\beta = \beta + \Delta x^+_{4:6}$

end for

the true quaternion using the noise parameters of the selected sensors. An example case is shown below in Figures 14 and 15. In this particular case, the estimation error remains below 0.5°throughout the simulation, even when the satellite is in eclipse and the sun sensors cannot provide measurements. This performance is enabled largely by the real-time estimation of the gyro bias, which experiences significant drift over time. It is interesting to note the spikes in the attitude error during eclipse that are quickly nullified when the spacecraft can resume the use of sun sensor measurements. Additionally, the gyro bias does not converge over time, and constantly changes due to the random walk in the sensor noise.

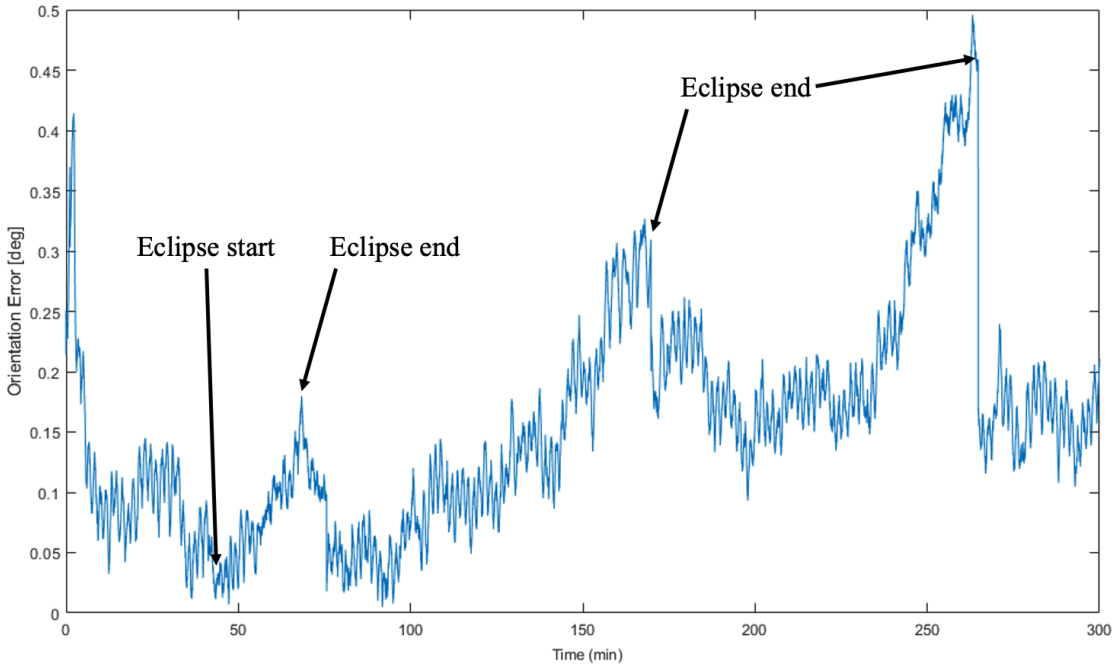

Fig. 14 MEKF error from truth.

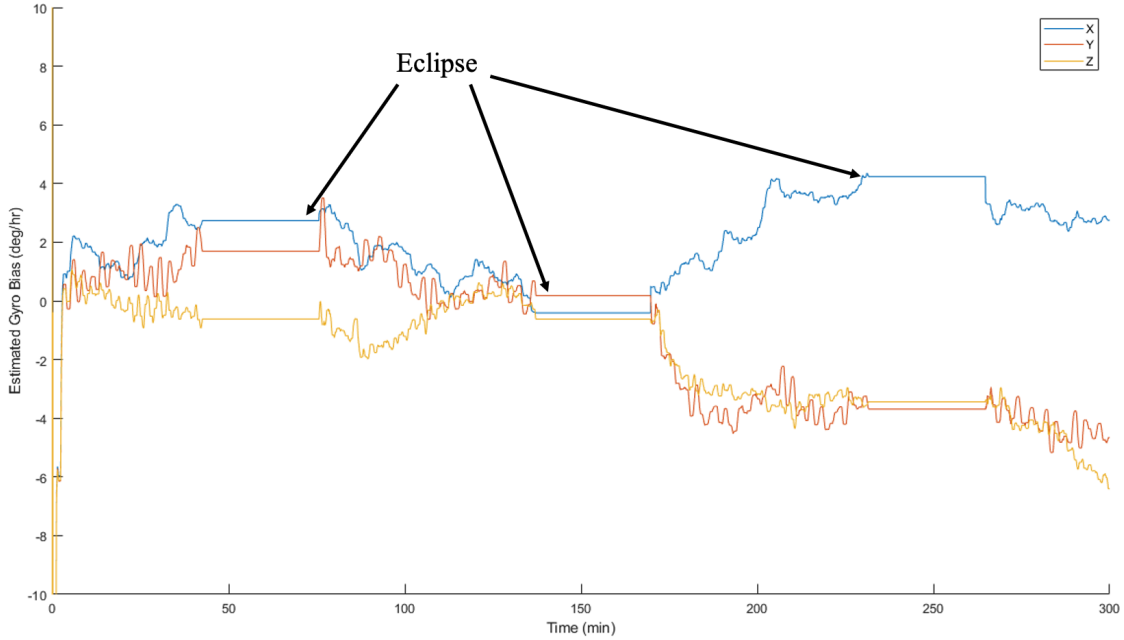

Fig. 15 MEKF estimated gyro bias over time.

While the results of this simulation prove the ability of the selected sensors to meet the pointing requirements, it should be noted that the mission requirements explicitly state that the attitude solution can be post-processed. This

analysis can be rewritten in a batch filter estimation scheme that is expected to produce better performance than the filter presented here. This is a topic of future work for this mission to further validate the system's ability to meet this requirement.

VI. Detailed Electrical System Design

The primary electrical system on WEBS consists of custom solar cell printed circuit boards hosting 24 total Lightricity solar cells, two custom SSDL battery packs, a GOMSpace NanoPower P31u, and a custom inhibit board that both hosts WEBS' custom inhibit circuitry and serves as an adapter between the battery packs and the NanoPower P31u.

A. Solar Cells

The solar cells selected for WEBS are the Lightricity 8040 cells, selected for their claimed performance and ease of procurement compared to similarly marketed alternatives. The cells claim a beginning-of-life efficiency of 30% with an area of 30.15 cm^2 per cell, and have a claimed history of flight heritage, making them a suitable choice for WEBS. However, the cells are sold as bare cells, necessitating the need for a custom PCB to be designed to host the 26 total cells on the outer faces of WEBS. 24 of these cells are connected to the primary EPS to charge the primary EPS batteries, with a single 2-cell panel dedicated to charging the custom EPS.

A custom PCB was designed for the WEBS structure to maximize the total number of cells that fit externally, while not using deployable solar arrays. Two variants of the solar cell were designed: a 2-cell and a 3-cell variant. The 3-cell board layout is shown below in Figure 16.

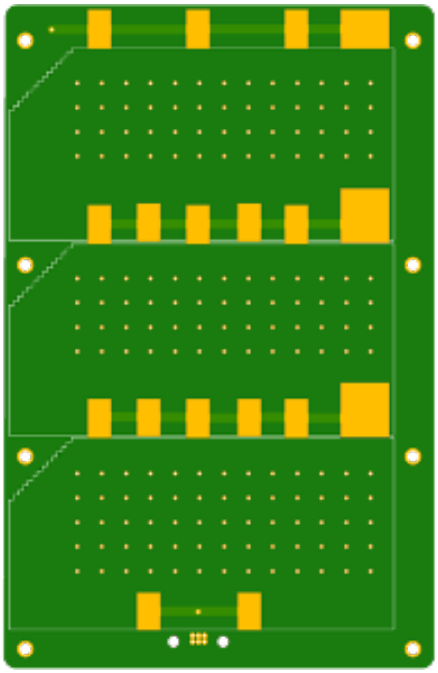

Fig. 16 WEBS 3-cell solar PCB.

B. GomSpace NanoPower P31u

The GomSpace NanoPower P31u[13] has been used on a number of previous SSDL CubeSat missions, including RANGE and TARGIT, serving as the primary EPS controller. The P31u has two permanent power channels, with 6 customer-configurable, switchable power channels to power various subsystems along with 3 max-power-point-tracking solar circuits with 6 solar cell inputs to efficiently recharge the CubeSat batteries. While the P31 offers many desirable features and excellent flight heritage, its inhibit system does not meet the strict UNP requirement of two high-side and one low-side inhibit and is incompatible with the power-on scheme implemented on WEBS by default. The inhibit board discussed in Section VI.D addresses these issues.

C. Battery Packs

The battery packs used for the WEBS mission are custom-made by the Georgia Tech Space Systems Design Laboratory and specifically designed for use in CubeSat missions. Each pack hosts four 18650 Lithium-ion cells in series, resulting in an energy storage capacity of about 50 watt-hours each. Additionally, each battery pack features a protection circuit that provides under-voltage, over-voltage, and short-circuit protection that also actively performs cell balancing during operation. This ensures minimal differences in cell voltages over many charge/discharge cycles over the lifetime of the battery pack. These packs can also be stacked in parallel to increase battery capacity and reduce the stress on each pack while providing redundancy in the event of a cell failure. Each pack contains its own cell protection circuitry, and as such a stacked system with multiple packs can sustain individual pack and cell failures without interrupting satellite operations. To improve battery state of charge estimation, each pack also contains a specialized integrated circuit to provide an accurate state of charge estimate using the battery voltage, consumed amp-hours, and temperature that is far more accurate than estimating the battery state of charge from voltage alone, as is common on many CubeSat EPS systems.

Creating custom battery packs is a non-trivial process, as each flight cell must be rigorously tested prior to integration to ensure the cells will survive launch environments. Additionally, the battery PCB design must be qualified with destructive over-voltage, under-voltage, and short-circuit testing to ensure that the design is safe for spaceflight. Due to this process, CubeSat battery packs are traditionally relatively expensive, but the WEBS team can produce and test packs for a fraction of the cost of commercial alternatives, allowing for missions such as WEBS to fly larger packs. A fully assembled battery pack is shown in Figure 17. Ultimately SSDL plans to refine this design along with the Custom EPS controller to provide a flight-proven and reliable EPS system designed for robust operation while complying with the most stringent launch provider standards.

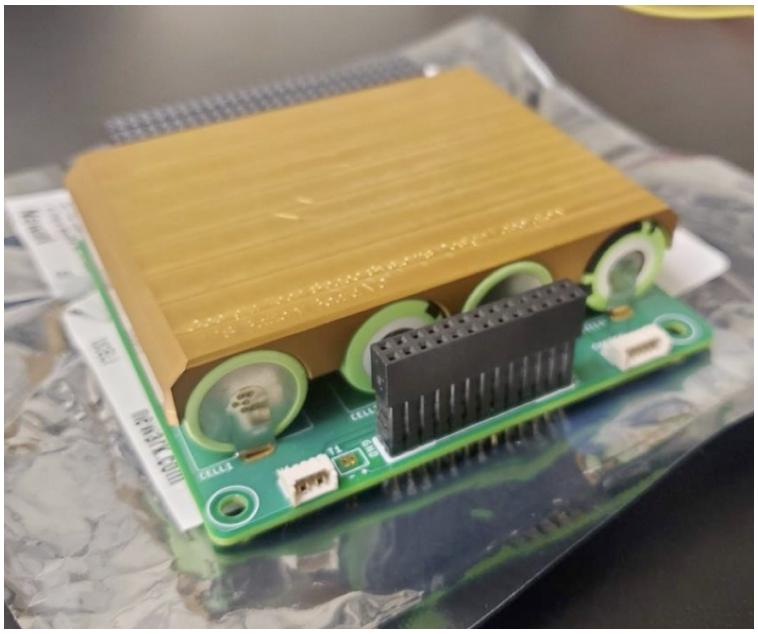

Fig. 17 Custom battery pack.

D. Power on Scheme and Inhibits

For the WEBS mission, a unique power-on scheme is required. The majority of CubeSat missions simply use end rail or deployment switches that become un-depressed upon ejection from the satellite dispenser, powering on the satellite. For WEBS, the proposed CONOPS requires a full system checkout to occur prior to deployment, and as such, the CubeSat must be able to power on and power down again prior to deployment. In order to accomplish this, a set of interfacing signals has been defined that allows the primary satellite to power WEBS on and off at will. Additionally, UNP requires that the CubeSat EPS employs two high-side and one low-side power path inhibit to ensure that the batteries are electrically isolated from the rest of the system prior to power-on.

The power-on scheme is comprised of three activation signals that are to be received simultaneously. Upon the receipt of these signals(AACT1, AACT2, and AACT3), WEBS powers on and begins to perform subsystem checkouts. At any point prior to deployment, Arachne can power off WEBS by sending a single deactivate signal(DEACT). This signal un-latches all three activation signals, powering WEBS off. Additionally, the inhibit circuitry contains a remove-before-flight pin that prevents WEBS from powering on regardless of activation signal inputs.

The inhibit scheme consists of two primary circuits, a latching enable circuit that determines when the CubeSat should be powered using the three activate and single deactivate signals and a non-latching power circuit that connects the battery to the EPS controller that is driven by the aforementioned enable circuit. In addition to connecting the battery to the EPS controller, the inhibit circuitry also passes an ENABLE signal to the NanoPower P31u that turns on the board and enables charging via solar cells. Altogether, this system meets the UNP inhibit requirements while operating according to the activation scheme defined by Arachne.

The inhibit circuitry shown above is physically implemented on the inhibit board which sits stacked in between the battery packs and NanoPower P31u control board. By implementing the circuitry on this board, the batteries remain electrically isolated from the rest of the electrical system until the power-on conditions discussed above are met. An EPS system block diagram is shown in Figure 18 and the final board layout for the custom inhibit board is pictured in Figure 19.

This inhibit circuitry has been tested on a breadboard setup, using an Arduino as a stand-in to validate the latching behavior of the circuit.

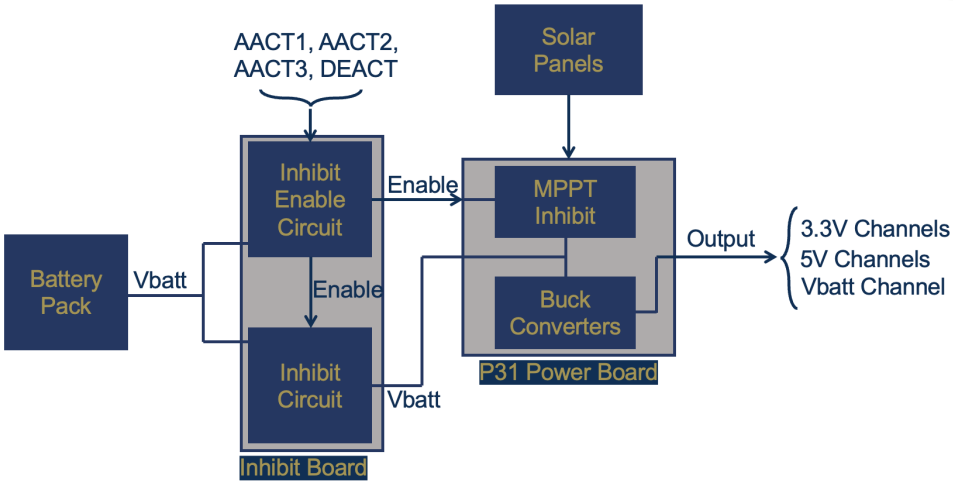

Fig. 18 EPS block diagram.

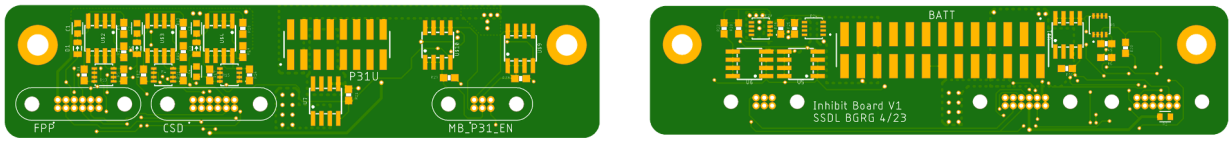

Fig. 19 WEBS inhibit board layout.

VII. Structural Design

A. Overview

The design of the WEBS structure follows the general mission theme of robustness and simplicity. Inspired by similar 6U CubeSat structures, the WEBS structure consists of two precisely machined top and bottom plates, two end

plates, two interior plates for mounting avionics, and two side plates. As such, the structure only contains eight major components. While the WEBS structure is designed with simplicity in mind, it is also designed with integration in mind, and as such, allows the top, bottom, and side plates to be removed easily, allowing integrators to access internal components and harnessing as needed.

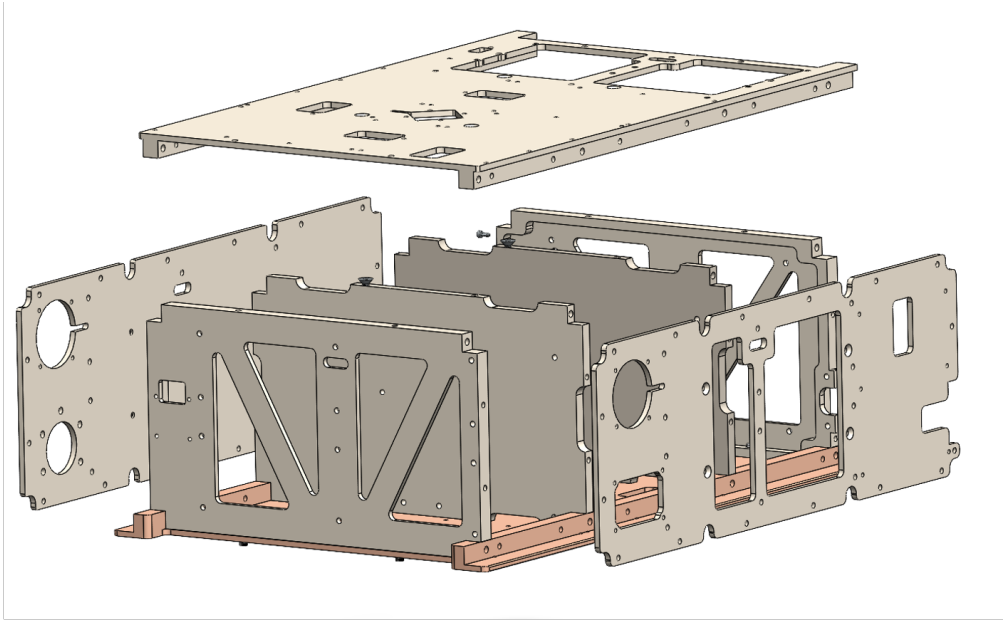

Fig. 20 3D Exploded View of WEBS Structure.

B. Avionics Mounting

The primary and secondary avionics stacks are mounted in between the two interior plates of the structure using a series of unthreaded aluminum standoffs with an M3 threaded rod that is tensioned on both ends to compress and stiffen each stack. The overall stack length inside of WEBS has been shortened from previous revisions due to concerns related to low resonant modes that could occur as a result of a longer stack length. The structure also provides a generous amount of spacing for connectors and harnessing with built-in cable pass-throughs and surface area for mounting cable tie-downs. The two avionics stacks are shown in an exploded view in Figure 21.

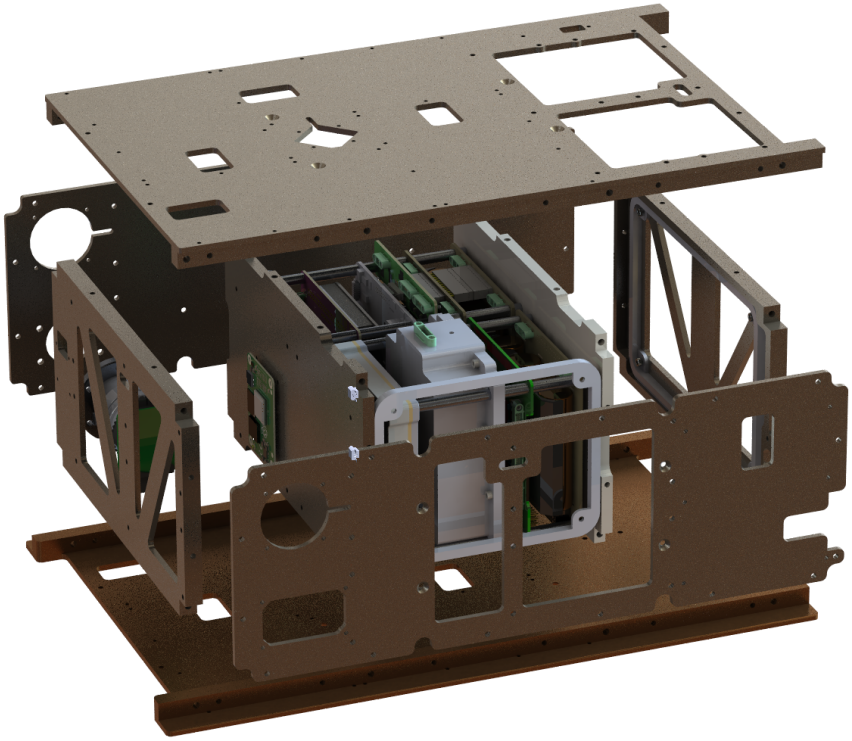

Fig. 21 3D Exploded View of WEBS Structure.

C. Fasteners

WEBS used standard-size Imperial fasteners wherever possible. All primary structural bolted connections used either 6-32 or 4-40 316 Stainless Steel fasteners All fasteners secure into free-running Nitronic-60 low-outgassing helical inserts for added joint strength and increased cycle life. Flat-head fasteners are avoided wherever possible, as these fasteners are generally difficult to stake during final assembly. Instead, socket head fasteners are used for the majority of bolted connections. Special care was taken to ensure that bolts do not pass through multiple parts before securing into their respective threaded connections, as multi-joint bolted connections are challenging to model and predict using finite-element analysis. Additionally considered are the venting characteristics of blind holes in the structure, as trapped air pockets should be avoided on spaceflight hardware. To address this, all threaded holes are through-hole where possible and use a pressure relief built into the structure or vented fasteners otherwise. NASA STD-5020-A[14] requires that all threaded fasteners contain "a minimum of one locking feature that does not depend upon preload to function." For WEBS, this takes the form of Loctite 271, a thread locker that meets NASA standard out-gassing total mass loss (TML) requirement of less than 1%. Additionally, bolts for WEBS are to be pre-loaded according to NASA STD-5020-A[14].

D. Manufacturing

The bottom plate is machined from 7075 aluminum alloy that is then hard-anodized according to the specifications set forth in [1]. As this plate interfaces with the CubeSat deployer, it requires the most stringent manufacturing tolerances but is still designed simply enough that it can be machined on campus at Georgia Tech without the need for outsourcing. Note however, that the hard anodization must take place at an off-campus vendor and adds 1 thousandth of an inch of thickness to the coated surface, which must be accounted for during machining.

All components other than the bottom plate are machined from 6061 aluminum alloy. The top plate takes a similar form factor to the bottom plate but does not demand the same manufacturing tolerances and can be machined entirely on a 3-axis mill. The end and interior plates are designed to be cut on a water jet, then machined down to their final dimensions and the side plates can be cut entirely on a waterjet, making it trivial to adapt these parts for different external components. Due to the deployer tab rail design, the final exterior dimensions of the structure do not have to be

precise compared to comparable rail deployment systems, allowing for much faster structure fabrication. Prior to the final assembly, all aluminum components must be alodine-treated to prevent out-gassing on orbit.

E. Future Use

The WEBS structure is designed with reconfiguration for future missions in mind. As a generic 6U structure, this design can host a number of payload configurations and can be used as a baseline for future SSDL 6U missions. The SolidWorks file for WEBS has been created using global variables that can quickly be modified to change various aspects of the design such as overall height and stack length to change, making adaptations for future payloads trivial. It is important to note, however, that WEBS will end up using a 12U deployer and as such, its final height has been increased so that the final CG lies within the acceptable ranges for this deployer.

VIII. Lessons Learned and Future Work

The WEBS mission has transformed from a mission concept to a relatively mature system in just over one year's time during which, the WEBS team has learned a great deal of the many aspects that feed into the formulation of a sensible mission and spacecraft design. In working on the design of WEBS, the most universally useful resource has consistently been previous CubeSat missions. Past missions contain a wealth of knowledge on what systems work well in which circumstances, allowing the WEBS team to pull the most useful and relevant technologies and techniques from these resources, especially those related to previous SSDL flight projects. With that in mind, WEBS will serve as a testing ground for new technologies that the SSDL hopes to bring to a more mature state in the coming years. By starting with the development of relatively simple systems and components such as magnetorquers and battery packs, the WEBS team has been able to retain a relatively low-risk tolerance while using novel systems through thorough testing and thoughtful design. A common theme in the early design stages of WEBS was that the initial system designs were often far too complicated and ultimately proved infeasible with the provided constraints on time and resources. Through simulation and design, the WEBS team has greatly simplified both the overall spacecraft and operational design to complete the primary mission with the customer's goals in mind.

While the system design for the WEBS mission is mature, given the remaining time to delivery, there is still a significant effort required to bring WEBS from its current state to a deliverable state. While much of the detailed engineering work has been completed, much of the work has yet to be done, especially that relating to system integration and testing. WEBS has a significant amount of time built into its schedule for system testing due to the nature of the mission CONOPS to allow for high system confidence in system performance prior to launch, but key systems must be integrated and tested together before a full mission lifecycle test can be completed. A majority of flight and engineering systems have been procured, but the team is still waiting to receive some core components prior to full system testing. Namely, these include the S-band radio and solar cells. In the meantime, the team is focused on thoroughly testing the systems in-house, refining current processes and documentation, and manufacturing flight systems in anticipation of receiving these components.

IX. Conclusion

Overall, WEBS is a unique CubeSat mission in that it is designed to operate as a supporting spacecraft in a much larger science mission system. As such, WEBS brings with it various unique challenges, especially for a University CubeSat mission. WEBS takes an overall low-risk mission-focused design in order to maximize the probability of success given the mission timeline and constraints. The overall mission and spacecraft design was reviewed in detail, with key architectural decisions and rationale highlighted along the way to inform both future contributors to the WEBS mission and future SSDL missions. Additionally, several key trade studies were reviewed to justify the overall system design from the perspective of power, communications, and attitude determination. Select systems were explored in detail to emphasize some of the more unique aspects of this mission such as the unique power-on scheme and custom structure design. While still in its development process, WEBS is on track for an on-time delivery and successful mission. When delivered, the WEBS mission aims to further wireless power transmission technology in the space domain to provide additional power options to future spacecraft systems.

Acknowledgments

Thanks to Associate Professor Brian Gunter and Professor Greg Durgin for serving as the Principal and Co-Investigators on the WEBS mission, respectively, and for providing clarity and guidance throughout both the preliminary mission development and detailed engineering stages of the design process. Additional thanks to the entirety of the WEBS team for making this mission happen, UNP for providing guidance and scrutiny along the way, and AFRL for being proactive in systems engineering discussions.

References

[1] *Payload Specification for 3U, 6U & 12U*, Rocket Lab USA, August 2018.

[2] *SRS3 Full-duplex Low-power S-band Transceiver*, Satlab, 2018.

[3] *OEM719 Multi-Frequency GNSS Receiver*, NovAtel, 2022.

[4] *TW1829 Dual-Band Antenna GPS/QZSS + GLONASS + Galileo + Bei Dou*, Tallysman, 2023.

[5] Markley, F. L., and Crassidis, J. L., *Fundamentals of Spacecraft Attitude Determination and Control*, 1st ed., Microcosm Press and Springer, New York, 2014.

[6] *M-G370PDF1*, Seiko EPSON Corporation, 2022.

[7] *nanoSSOC-D60*, Solar MEMS Technologies S.L., 2023.

[8] *CubeMag Gen2.1 Compact*, CubeSpace, 2023.

[9] Tierney, B. B., "Scalable, High-Sensitivity X-Band Rectenna Array for the Demonstration of Space-to-Earth Power Beaming," Tech. rep., US Naval Research Laboratory, 2021.

[10] Tullino, S. K., "Investigative Microgravity Deployment Tests of the Canisterized Satellite Dispenser (CSD)," Tech. rep., Air Force Research Laboratory Space Vehicles Directorate, 2016.

[11] *S Band Antenna*, IQ Spacecom, 2015.

[12] *imuSensor*, 2023. URL `https://www.mathworks.com/help/nav/ref/imusensor-system-object.html`, accessed: 2023-03-22.

[13] *NanoPower P31u*, NanoPower P31u, 2022.

[14] *NASA-STD-5020A Requirements for Threaded Fastening Systems in Spaceflight Hardware*, National Air and Space Administration, 2018.